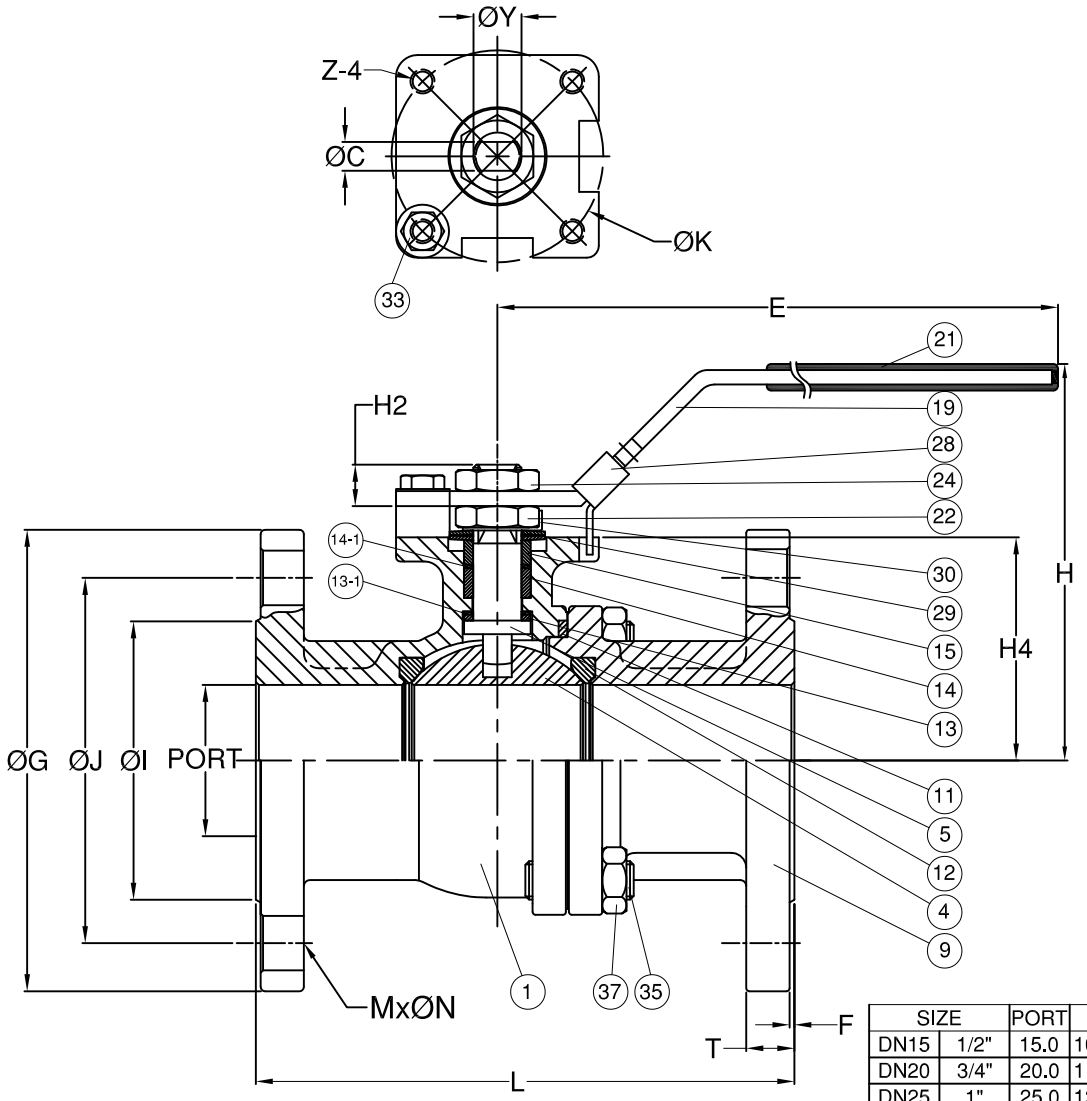

MATERIALS LIST

NO.	PART NAME	MATERIAL		Q'TY
1	BODY	ASTM A351 Gr.CF8M	ASTM A216 Gr.WCB	1
4	BALL	ASTM A351 Gr.CF8M	ASTM A351 Gr.CF8	1
5	STEM	SS316	SS304	1
9	END CAP	ASTM A351 Gr.CF8M	ASTM A216 Gr.WCB	1
11	BODY SEAL	GRAPHITE		1
12	SEAT	RTFE.		2
13	THRUST WASHER	GRAPHITE		1
13-1	THRUST WASHER	RTFE.		1
14	STEM PACKING	GRAPHITE		1SET
14-1	STEM PACKING	RTFE.		1
15	GLAND BUSH	SS304		1
19	HANDLE	SS304		1
21	HANDLE COVER	PLASTIC		1
22	STEM NUT	SS304		1
24	HANDLE NUT	SS304		1
28	LOCKING PAD	SS304		1
29	BELLEVILLE WASHER	SS301		2
30	TAB WASHER	SS304		1
33	STOP PIN	SS304		1
35	BODY BOLT	ASTM A193 Gr.B8	ASTM A193 Gr.B7	4
37	BOLT NUT	ASTM A193 Gr.8	ASTM A193 Gr.2HM	4

FLANGE DIMENSION: ASME B16.5
FACE TO FACE: ASME B16.10

DIMENSIONS

unit:mm

SIZE		PORT	L	E	H	H2	H4	C	ØY	ØG	ØJ	ØI	T	F	M	ØN	ØK	Z	weight
DN15	1/2"	15.0	108.0	132.0	80.0	8.5	38.5	6.4	9.6	89.0	60.5	35.0	11.2	1.6	4	16.0	42.0	M5*0.8P	2.2KG
DN20	3/4"	20.0	117.0	132.0	84.5	8.5	42.5	6.4	9.6	98.6	70.0	43.0	12.7	1.6	4	16.0	42.0	M5*0.8P	2.85KG
DN25	1"	25.0	127.0	166.0	102.0	12.0	52.0	8.0	11.2	108.0	79.2	51.0	14.3	1.6	4	16.0	50.0	M6*1.0P	3.85KG
DN32	11/4"	32.0	140.0	166.0	105.0	12.0	56.0	8.0	11.2	117.5	88.9	63.5	15.9	1.6	4	16.0	50.0	M6*1.0P	5.28KG
DN40	11/2"	38.0	165.0	198.0	125.0	12.0	65.3	9.5	16.0	127.0	98.6	73.2	17.5	1.6	4	16.0	70.0	M8*1.25P	7.09KG
DN50	2"	50.0	178.0	198.0	132.0	12.0	73.8	9.5	16.0	152.5	120.7	92.0	19.1	1.6	4	19.0	70.0	M8*1.25P	9.4KG

REV	DATE	DESCRIPTION	CODE	REVISER	REMARKS
					1/2"~2" Class150 FIRE-SAFE

MATERIAL	APPROVE		CHECK		A
	SCALE	FREE	UNIT	mm	DRAWN BY: Lawrence
	PART NO	AF-50F			DATE: 2010/04/02
OTHER	DWG NO	AF-50F	TITLE		Q'TY
					2-PC Firesafe Flanged Ball Valve
	Anson Flow Corp.				

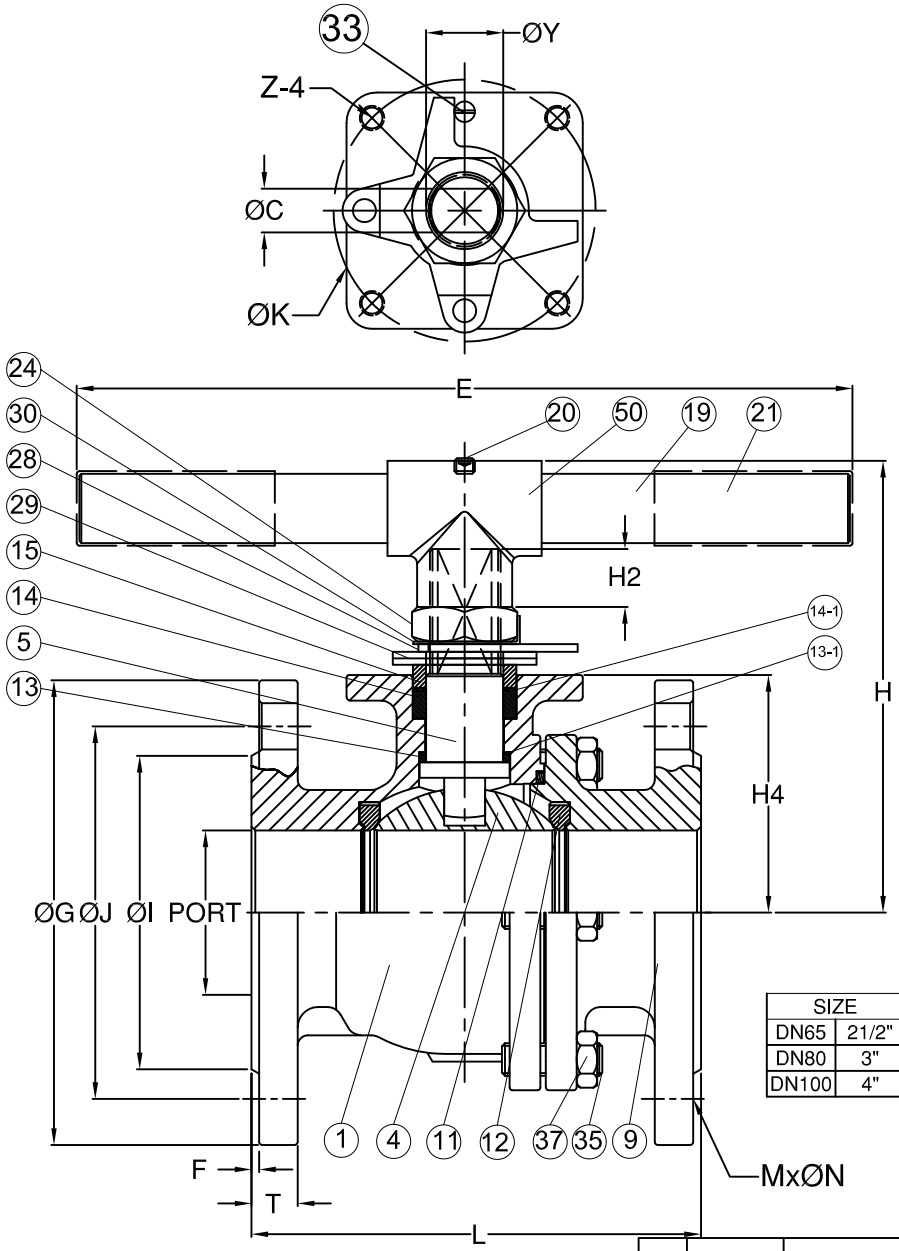

MATERIALS LIST

NO.	PART NAME	MATERIAL		Q'TY
1	BODY	ASTM A351 Gr.CF8M	ASTM A216 Gr.WCB	1
4	BALL	ASTM A351 Gr.CF8M	ASTM A351 Gr.CF8	1
5	STEM	SS316	SS304	1
9	END CAP	ASTM A351 Gr.CF8M	ASTM A216 Gr.WCB	1
11	BODY SEAL	GRAPHITE		1
12	SEAT	RTFE.		2
13	THRUST WASHER	GRAPHITE		1
13-1	THRUST WASHER	RTFE.		
14	STEM PACKING	GRAPHITE		1SET
14-1	STEM PACKING	RTFE.		
15	GLAND BUSH	SS304		1
19	HANDLE	LRON		2
20	SET BOLT	SS304		1~2
21	HANDLE COVER	PLASTIC		1
24	HANDLE NUT	SS304		1
28	STOP PLATE	SS304		2
29	BELLEVILLE WASHER	SS301		1
30	TAB WASHER	SS304		1
33	STOP PIN	SS304		6~8
35	BODY BOLT	ASTM A193 Gr.B8	ASTM A193 Gr.B7	6~8
37	BOLT NUT	ASTM A193 Gr.8	ASTM A193 Gr.2HM	1
50	HANDLE ADAPTER	ASTM A351 Gr.CF8		

FLANGE DIMENSION: ASME B16.5
FACE TO FACE: ASME B16.10

DIMENSIONS

unit:mm

SIZE		PORT	L	E	H	H2	H4	C	ØY	ØG	ØJ	ØI	T	F	M	ØN	ØK	Z	weight
DN65	21/2"	64.0	190.0	300.0	178.0	23.0	92.5	17.0	28.0	177.8	139.7	104.7	23.3	1.6	4	19.0	102.0	M10*1.5P	13.81KG
DN80	3"	76.0	203.0	300.0	188.0	23.0	101.7	17.0	28.0	190.5	152.4	127.0	23.9	1.6	4	19.0	102.0	M10*1.5P	17.36KG
DN100	4"	100.0	229.0	450.0	202.0	23.0	119.0	17.0	28.0	228.6	191.0	157.2	23.9	1.6	8	22.3	102.0	M10*1.5P	23.52KG

REV	DATE	DESCRIPTION	CODE	REVISER	REMARKS
					2-1/2"~4" Class150 FIRE-SAFE API 607

MATERIAL	APPROVE		CHECK		A
	SCALE	FREE	UNIT	mm	DRAWN BY: Lawrence
	PART NO	AF-50F			DATE: 2010/04/02
OTHER	DWG NO	AF-50F	TITLE		Q'TY
					2-PC Firesafe Flanged Ball Valve

Anson Flow Corp.

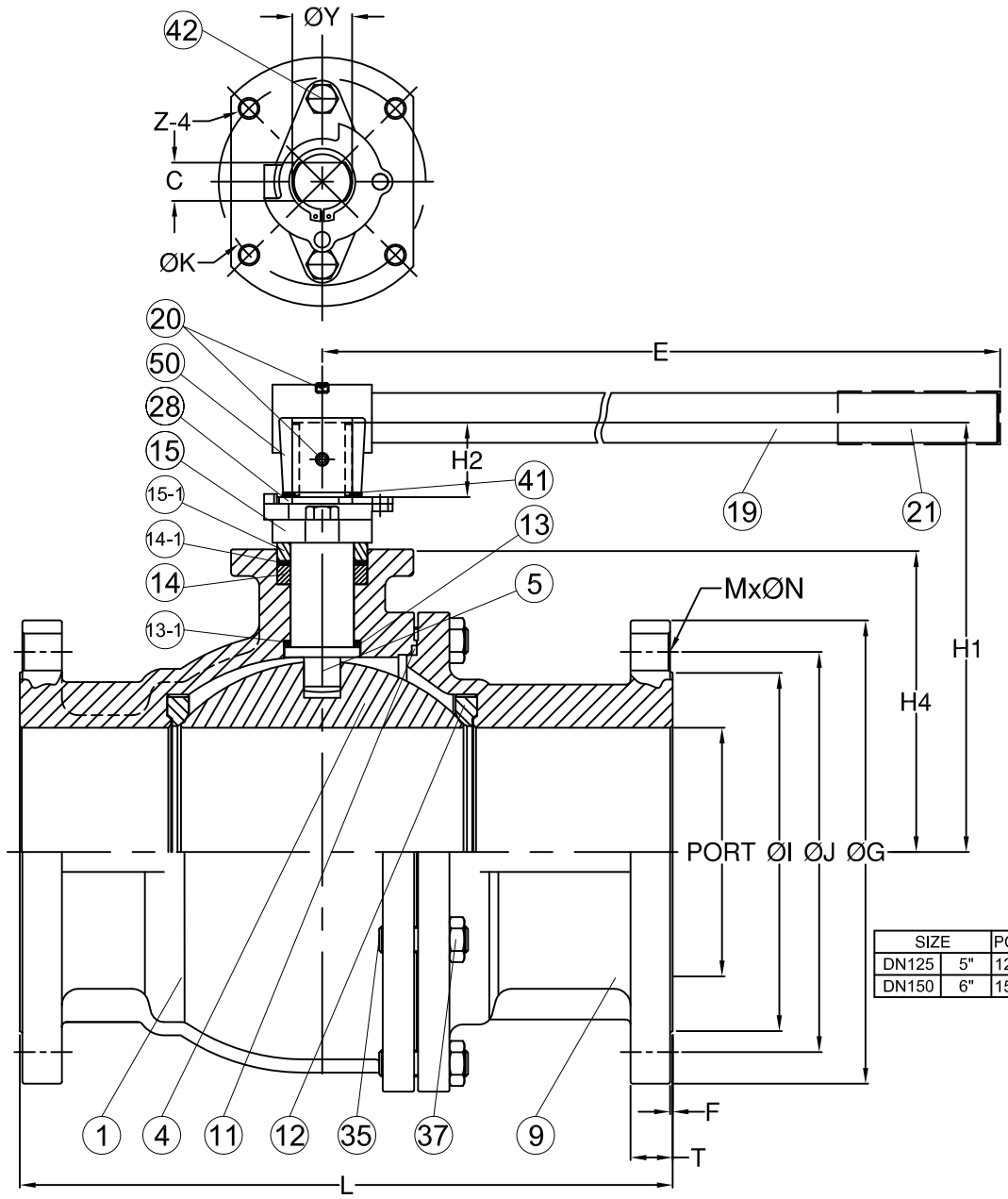

MATERIALS LIST

NO.	PART NAME	MATERIAL		Q'TY
1	BODY	ASTM A351 Gr.CF8M	ASTM A216 Gr.WCB	1
4	BALL	ASTM A351 Gr.CF8M	ASTM A351 Gr.CF8	1
5	STEM	SS316	SS304	1
9	END CAP	ASTM A351 Gr.CF8M	ASTM A216 Gr.WCB	1
11	BODY SEAL	GRAPHITE		1
12	SEAT	RTFE.		2
13	THRUST WASHER	GRAPHITE		1
13-1	THRUST WASHER	RTFE.		1
14	STEM PACKING	GRAPHITE		1SET
14-1	STEM PACKING	RTFE.		1
15	GLAND	ASTM A351 Gr.CF8	ASTM A216 Gr.WCB	1
15-1	GLAND BUSH	SS304		1
19	HANDLE	LRON		1
20	SET BOLT	SS304		2
21	HANDLE COVER	PLASTIC		1
28	STOP PLATE	SS304		1
35	BODY BOLT	ASTM A193 Gr.B8	ASTM A193 Gr.B7	8
37	BOLT NUT	ASTM A194 Gr.8	ASTM A193 Gr.2HM	8
41	SNAP RING	SS304		1
42	GLAND BOLT	SS304		2
50	HANDLE ADAPTER	ASTM A351 Gr.CF8		1

FLANGE DIMENSION: ASME B16.5
FACE TO FACE: ASME B16.10

DIMENSIONS

unit:mm

SIZE		PORT	L	E	H1	H2	H4	C	ØY	ØG	ØJ	ØI	T	F	M	ØN	ØK	Z	weight
DN125	5"	125.0	325.0	600.0	233.0	45.0	163.0	23.0	36.0	254.0	216.0	186.0	24.0	1.6	8	Ø22.3	125	M12*1.75P	47KG
DN150	6"	150.0	394.0	800.0	259.0	45.0	182.5	23.0	36.0	279.4	241.3	216.0	25.4	1.6	8	Ø22.3	125	M12*1.75P	67KG

REV	DATE	DESCRIPTION	CODE	REVISER	REMARKS
					5"~6" Class150 FIRE-SAFE API 607

MATERIAL
OTHER

APPROVE		CHECK			A
SCALE	FREE	UNIT	mm	DRAWN BY	Lawrence
PART NO	AF-50F			DATE	2010/04/02
DWG NO	AF-50F	TITLE		Q'TY	
				2-PC Firesafe Flanged Ball Valve	

Anson Flow Corp.