SIZE	ØA	ØB	ØC	E	F	T	L	H	HL
1/4″	6. 5	8. 74	9. 4	28. 5	#10-32	7/16″ *20UNEF	67	47	101
3/8″	9. 65	11. 89	12. 57	28. 5	#10-32	9/16″ *20UNEF	67	47	101
1/2″	12. 85	15. 9	17. 3	28. 5	#10-32	3/4″ *20UNEF	77	49. 6	101
3/4″	19. 16	21. 3	23. 6	35	#10-32	1″ *20UNEF	83	58	101

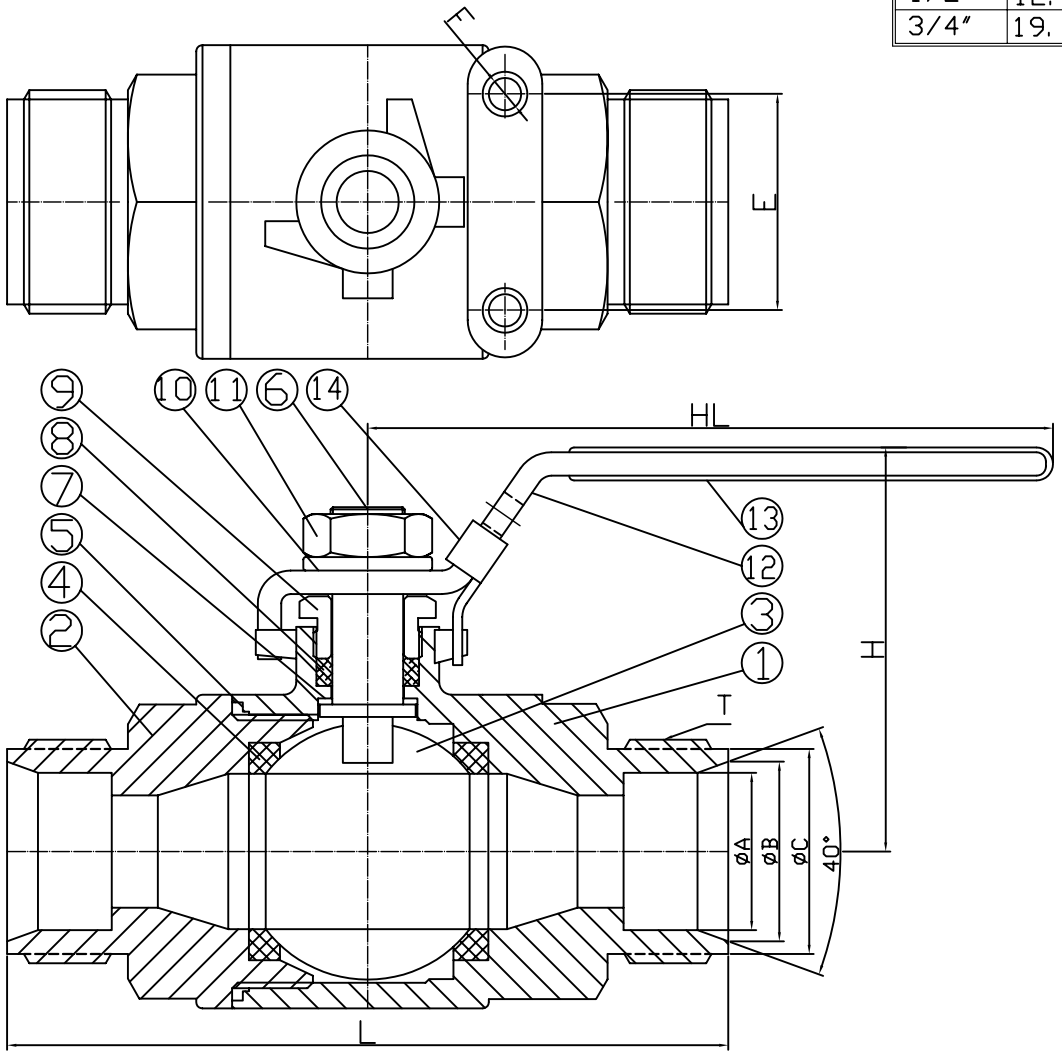

No.	PART NAME	MATERIAL
1	BODY	A351 CF8M
2	END CAP	A351 CF8M
3	BALL	A351 CF8M Gr. CF8M
4	BALL SEAT	RPTFE
5	BODY SEAL	PTFE
6	STEM	A276 TYPE 316
7	THRUST WASHER	RPTFE
8	STEM PACKING	PTFE
9	GLAND NUT	SUS 304
10	STEM WASHER	SUS 304
11	STEM NUT	SUS 304
12	HANDEL	SUS 304
13	HANDEL COVER	PVC
14	HANDEL LOCKING	SUS 304

P-T RATINGS

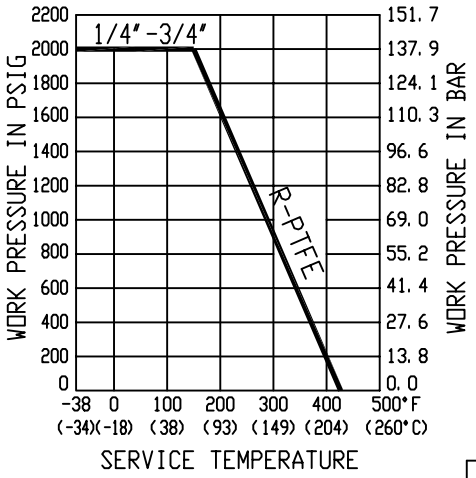

REV	DATE	DESCRIPTION	CODE	REVISER	REMARKS
					2000 PSI 2-pc Compression Ball Valve

MATERIAL	APPROVE		CHECK		REV F
	SCALE	FREE	UNIT	mm	DRAWN BY Peggy
	PART NO	AF-70			DATE 2005. 12. 05
OTHER	DWG NO	AF-70	TITLE		Q'TY
					Compression End 2-pc Ball Valve

Anson Flow Corp.